Horpol LED NEON marker light cold white/red - 12V-24V

LED marker lights by Horpol in white/red with NEON-look, so that you do not see the individual LEDs, but gives a diffused light.

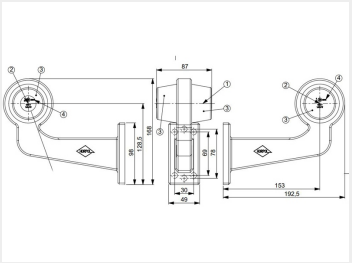

LED Marker lamps by polish Horpol, that with its NEON-look, gives you a diffused light, so that you avoid seeing the integrated 18 LEDs. The maker lamps are available in short and a long version with cold / xenon-white and red light.

The marker lamps have 5 meters 2×0,75 mm2 cable mounted, and can be used in all kinds of weather conditions since they are IP68.

Ref.: LD 2597, LD 2593, LD 2594

Buy online at:

www.matronics.eu/24605060

Specifications

Voltage	12-24V
Consumtion 12V / 24V	4/2W
LEDs	18
Cable length	5 meters
Cable thickness	2×0,75 mm2

Short
SKU 24605060

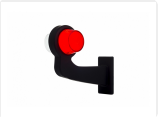

Long, Left
SKU 24605070

Long, Right
SKU 24605071
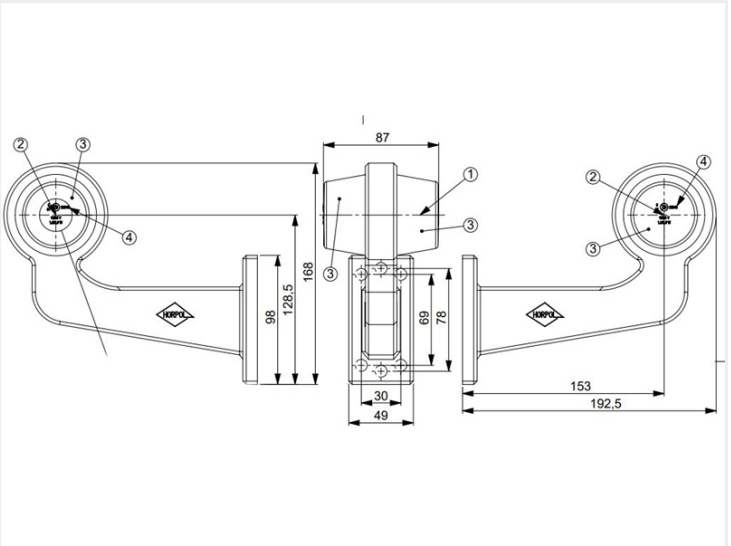
Product pictures